CF3 Three Band Phase-Linear Crossover Filter

Analog Metric

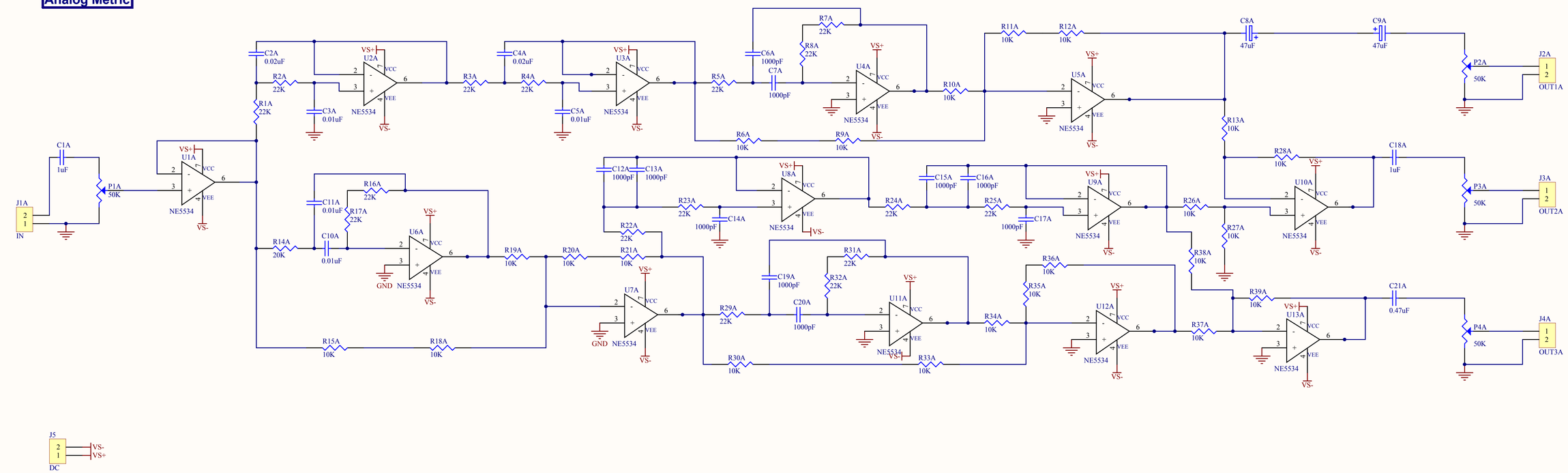

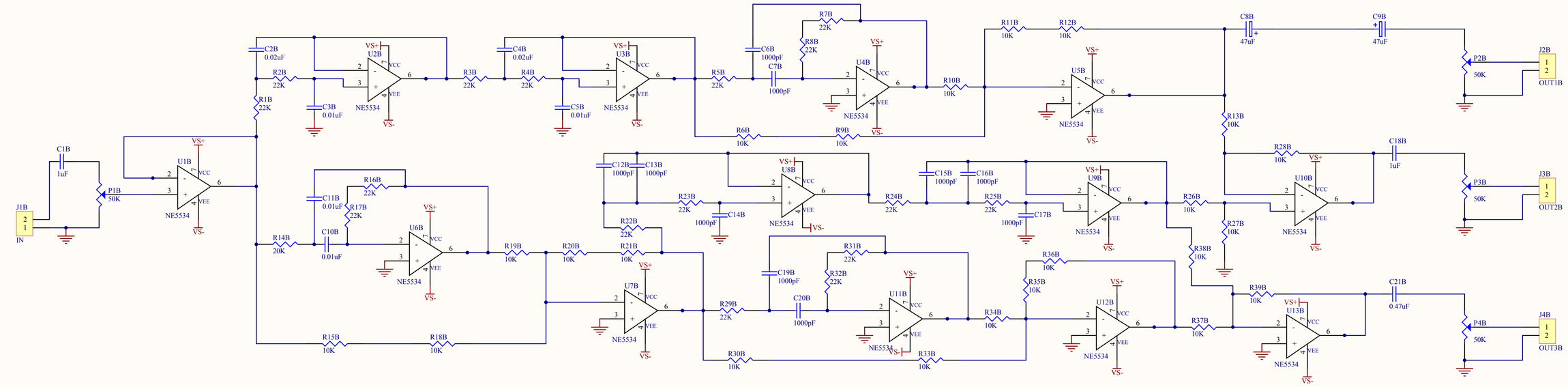

Title		
Size C	Number	Revision
Date: 4/2/2014	Sheet of	
File: E:\development\..\CF3_modified.SchDoc	Drawn By:	