6SN7 SRPP Pre-Amplifier

Analog Metric

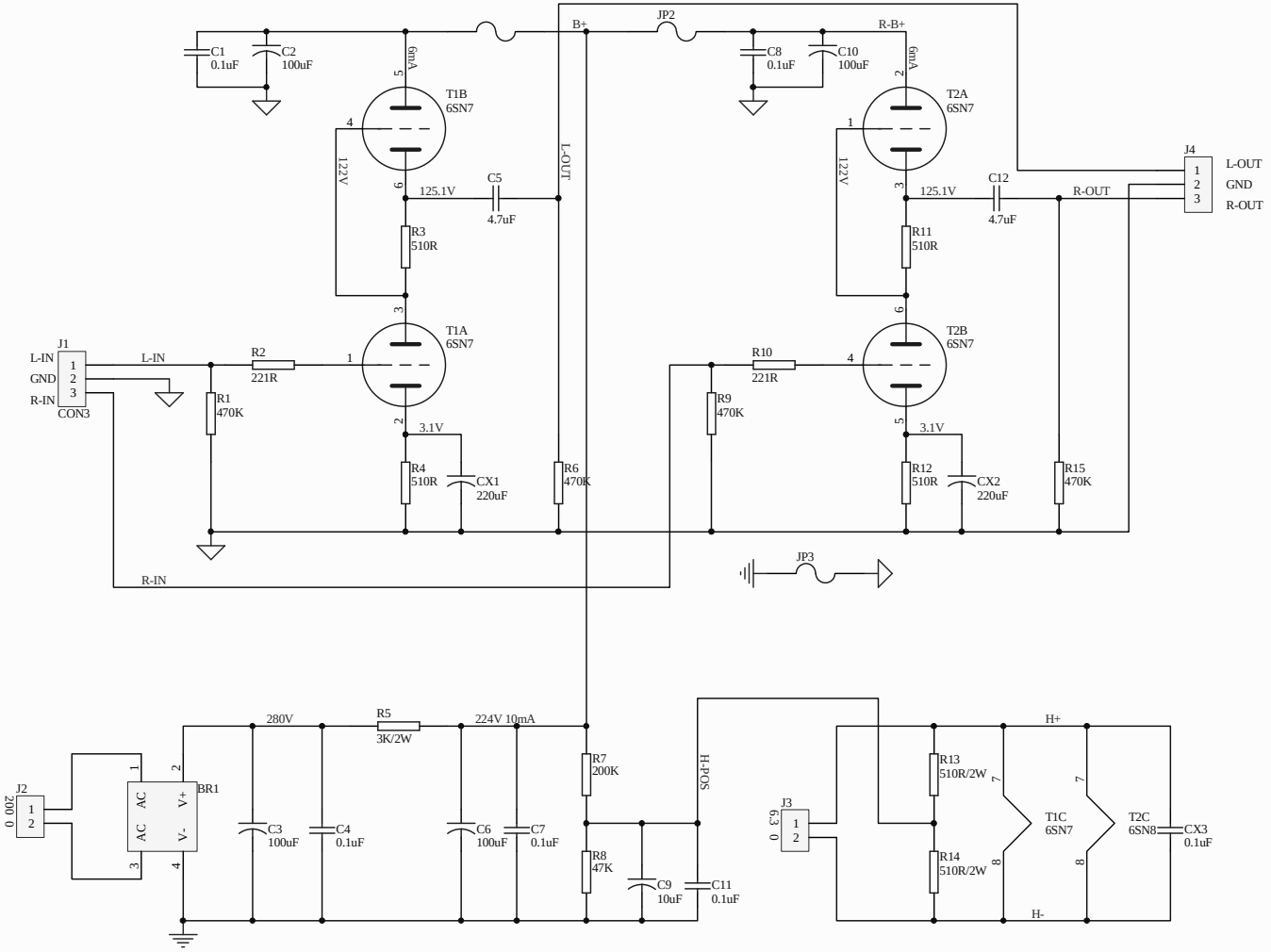

Title		
Size B	Number	Revision
Date: 21/6/2011	Sheet of	
File: C:\Users\..\6SN7 SRPP Schematic.SchDoc	Drawn By:	