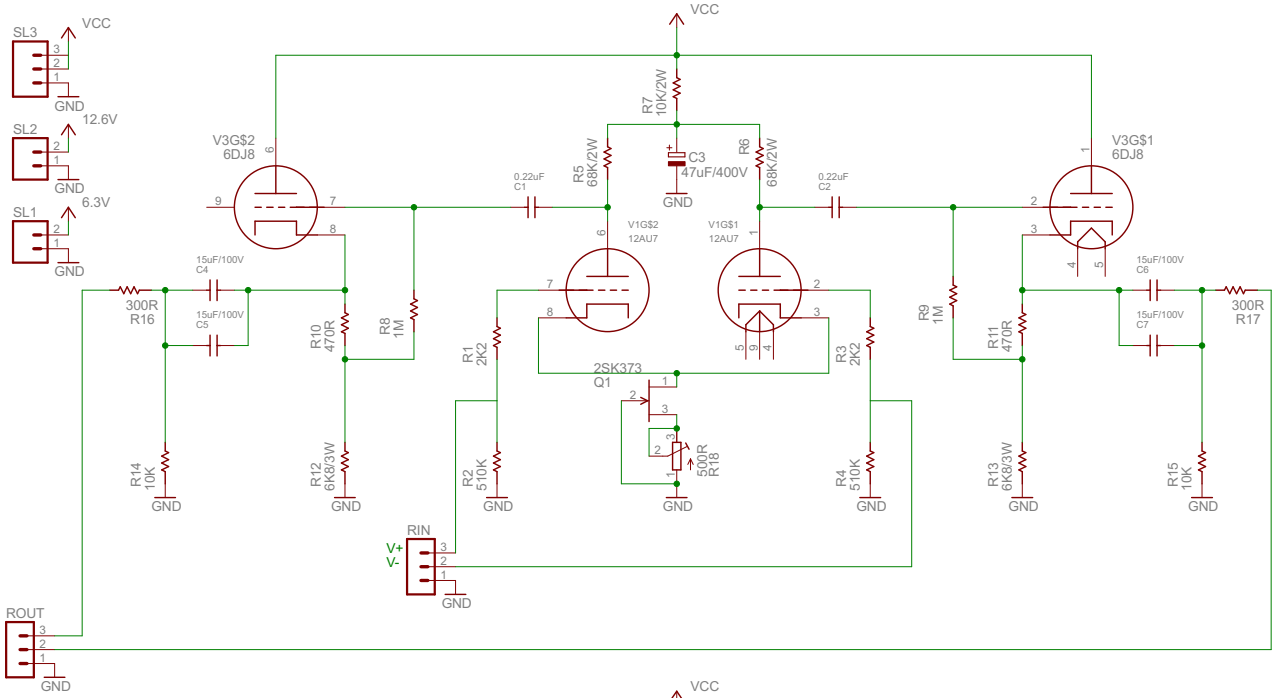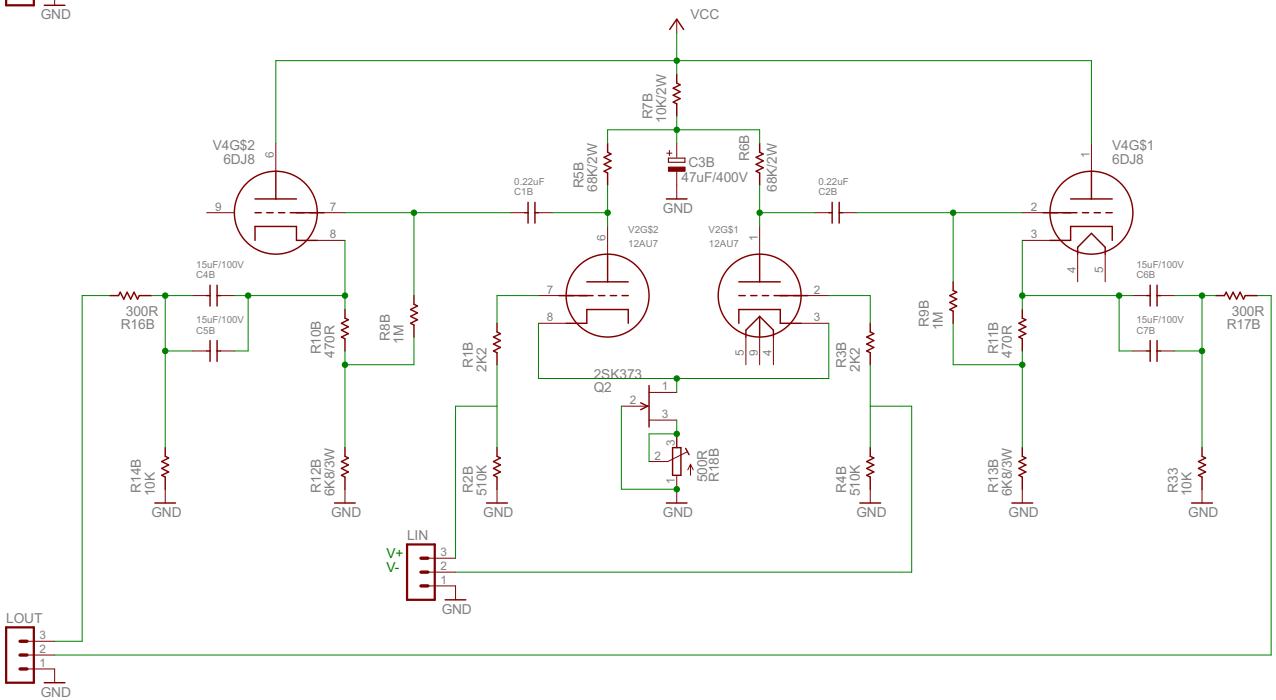ANALOG METRIC
12AU7 BALANCE PRE-AMPLIFIER